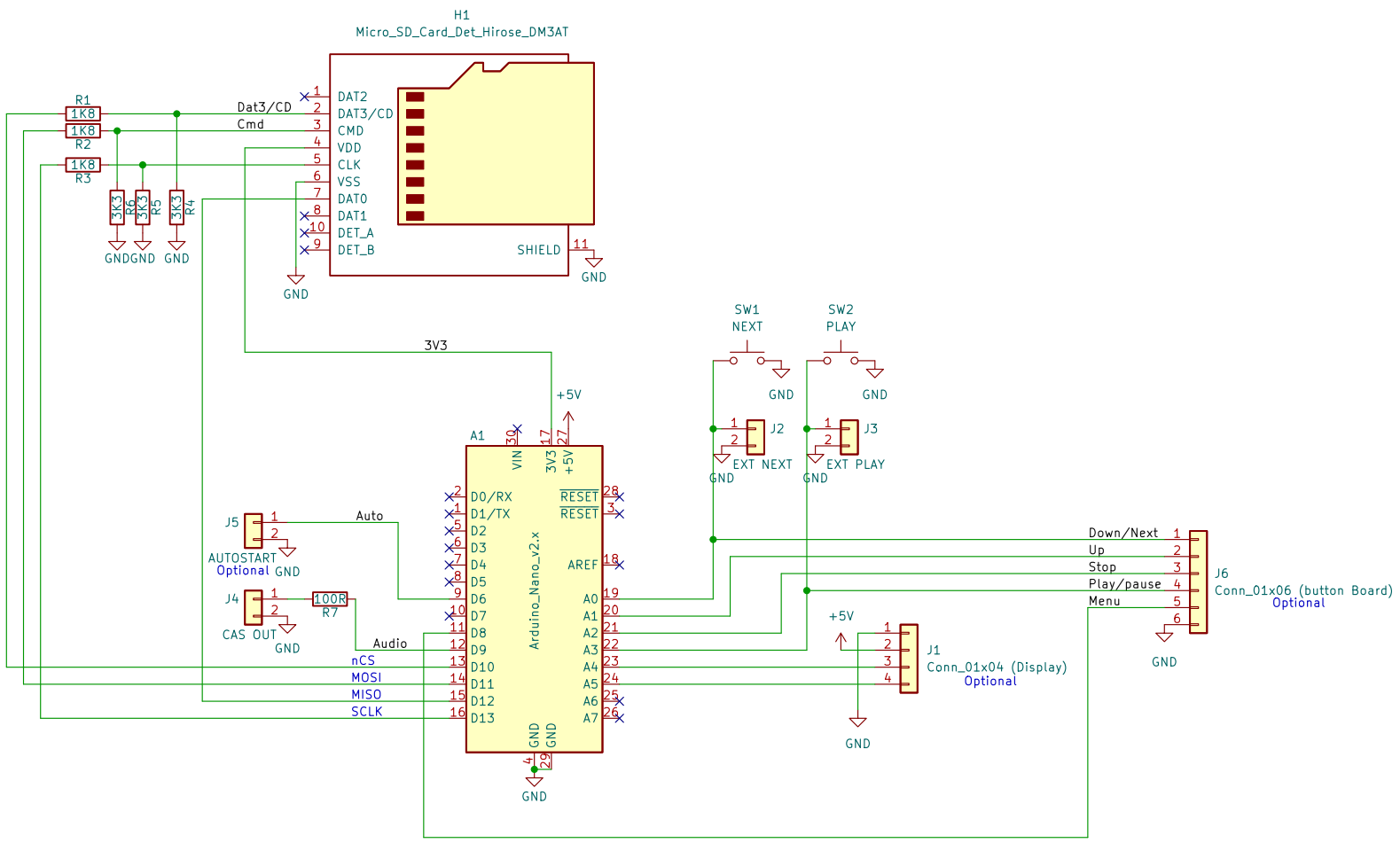

rev 1.3 Corrected resistor dividers (that are probably not even needed)
CHANGED RESISTORS TO 0805
REV 1.2 ROTATED CARD HOLDER 180 DEGREES

Sheet: /
File: TZXDuino pico.kicad_sch

Title: TZXDuino Pico

Size: A4	Date: 2023-07-14	**Rev: 1.3**
KiCad E.D.A. kicad (6.0.1-0)		Id: 1/1